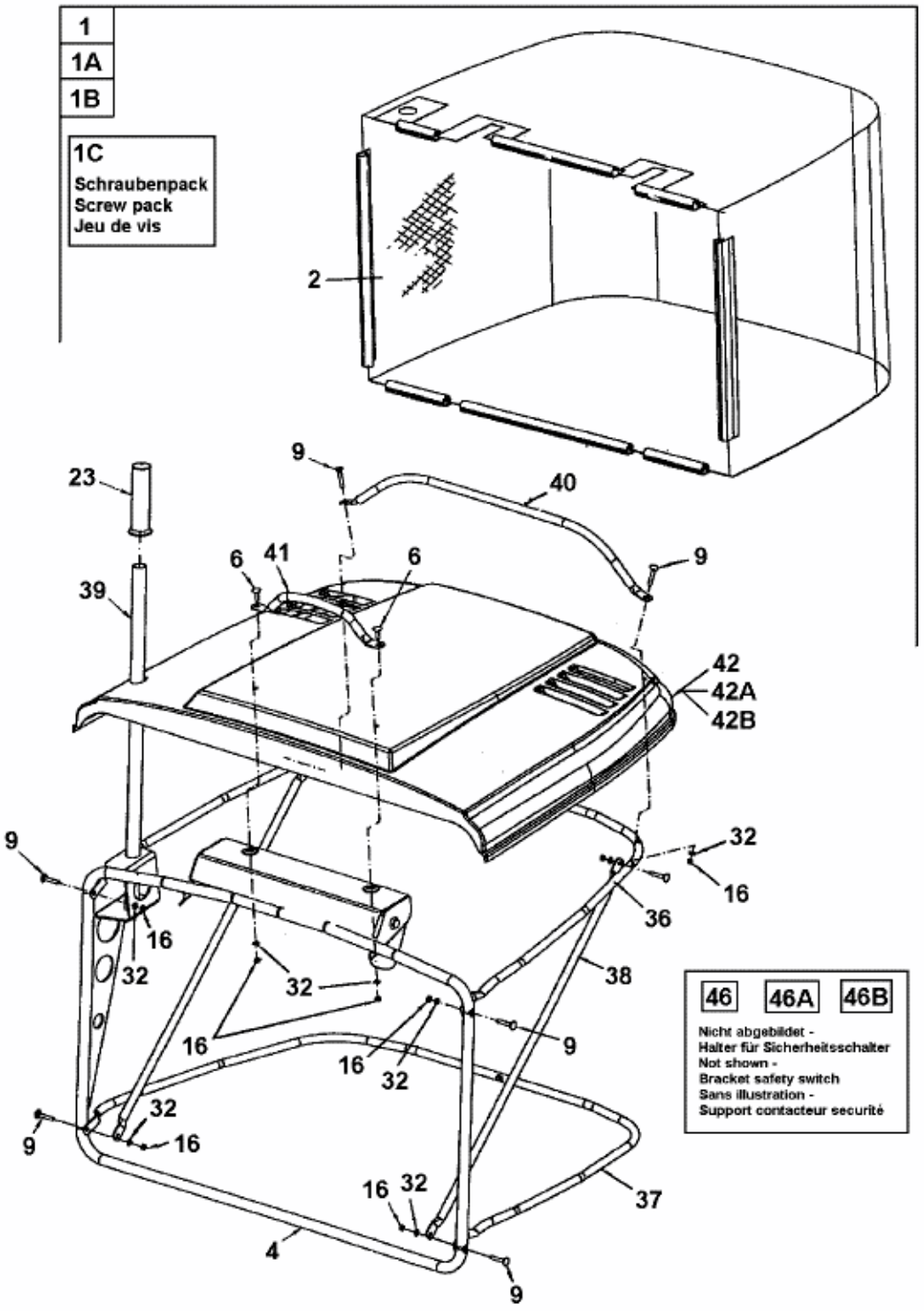EUROTRAC 155/92 > 13AP475E600 (2001) > GRASS BOX